OCR Premier Series

12492.02
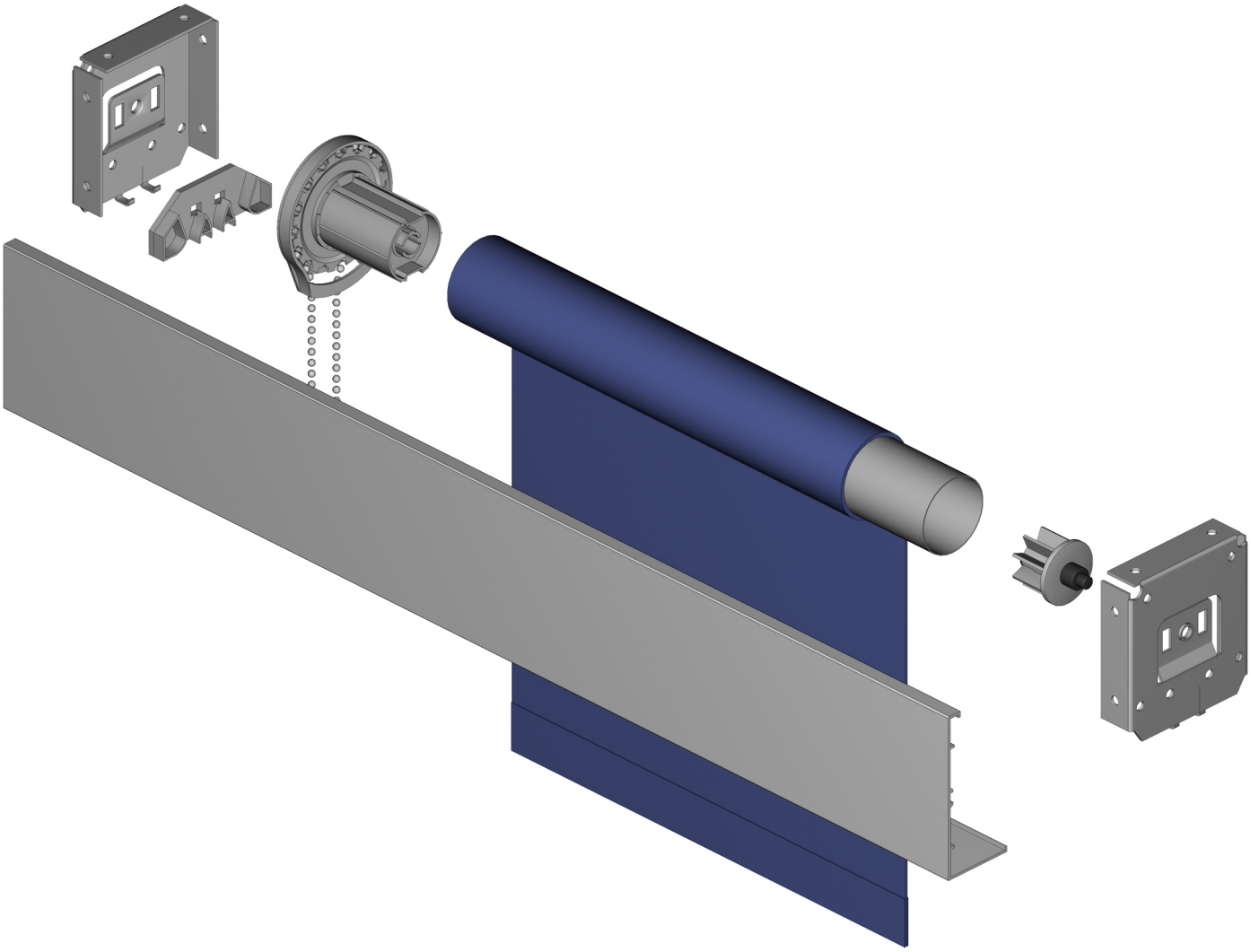
Option: Fascia